WE RESERVE ALL RIGHTS IN THIS DOCUMENT AND IN THE INFORMATION CONTAINED THERIN. REPRODUCTION, USE OR DISCLOSURE TO THIRD PARTIES WITHOUT EXPRESS AUTHORITY IS STRICTLY FORBIDDEN

© vetropack 2000

FÜER DIESES DOKUMENT UND DEN DARIN DARGESTELLTEN GEGENSTAND BEHALTEN WIR UNS ALLE RECHTE VOR. VERVIELFÄLTIGUNGEN, BEKANNTGABE AN DRITTE ODER VER-WENDUNG SEINES INHALTS SIND OHNE UNSERE AUSDRUECKLICHE ZUSTIMMUNG VERBOTEN

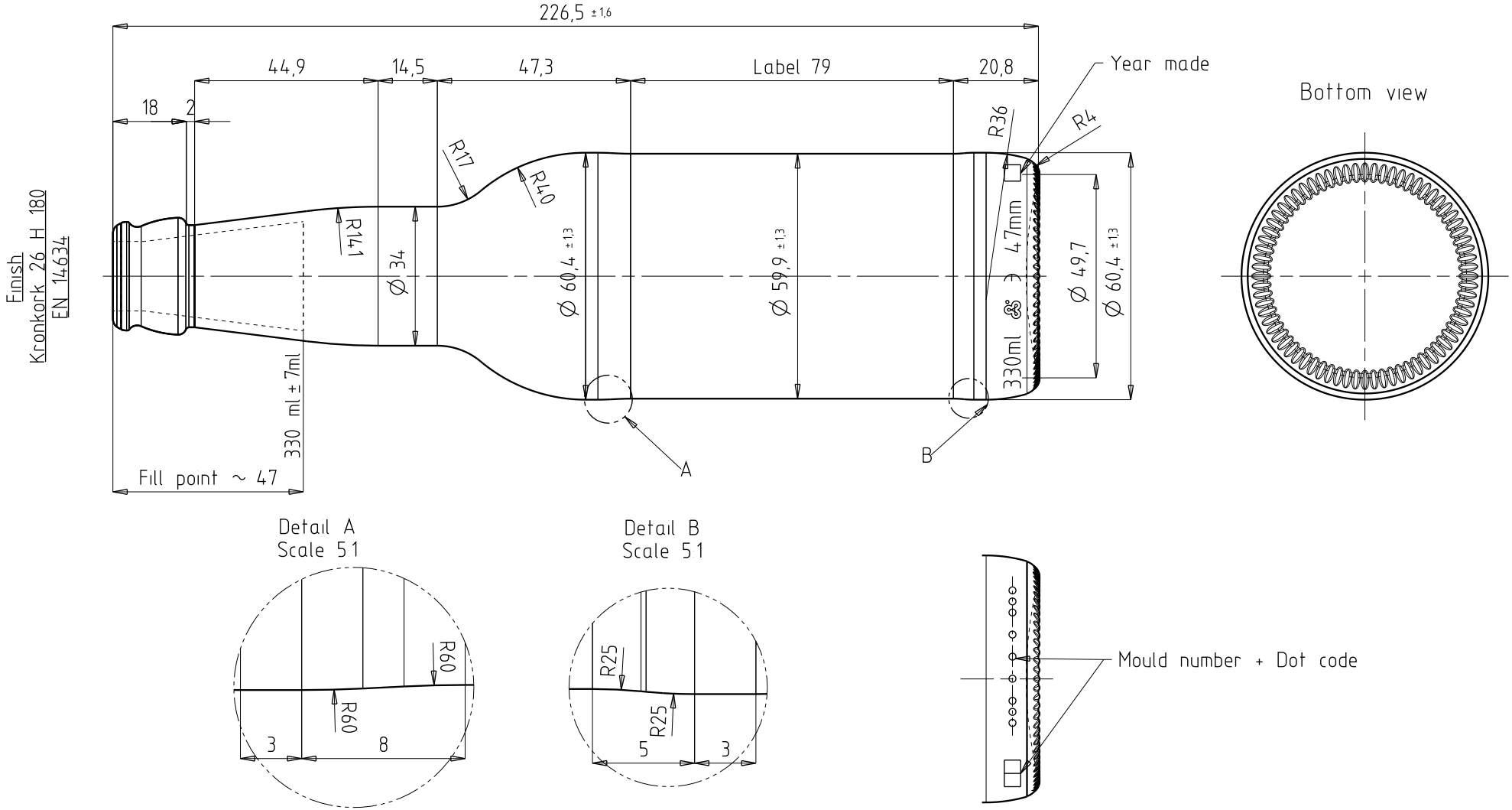

INDEX	ZMENY / modifications	DAT	JMENO

SOUHLAS TECHNOLOGA PT approved		DAT	VIS
SOUHVYRTYMU FtB released	VYRZAVOD VMG	DAT 14 06 11	VIS HS
	VYRZAVOD	DAT	VIS
	VYRZAVOD	DAT	VIS

NETOLEROVANE ROZMERY
DLE DIN 6129

dimensions without tolerances conform to standard DIN 6129

TEPLOTA PLNENI Filling temperature	≤ 15 °C
TEPLOTA ZPRACOVANI Conditioning temperature	≤ 65 °C
OBSAH CO_2 CO_2 content	≤ 6 g/l
OBSAH ALKOHOLU Alcohol content	≤ 16 Vol%
AXIALNI ZATIZENI Axial pressure	daN
POUZITI Disposal	MW / AW / EW X
PROCES Process	BB X / PB / EPB

NOMINAL OBJEM Capacity fillpoint	330 ml ± 7 ml
TOTAL OBJEM Capacity brimful	346 ml ± ml
HMOTNOST Approx glass weight	~ 225 g
STREDNI TLOUSTKA STENY Average wall thickness	2 44 mm
PRUMER POD USTIM Neck connection dia	25 mm
VNITRNI PRUMER KALIBRU Min through bore	15,1 mm
BARVA Color	BR GR WE

POZNAMKA Remarks	
ZAKAZNIK Customer	
PODOBNY JAKO Similar to	
NAHRAZUJE Replace No	40003008a11002
NABIDKA CISLO Offer No	
MERITKO Scale	1:1
KRESLIL Des	Pam
DAT	14 06 11
DATA TYP Filetyp	AZ

vetropack
Vetropack Moravia Glass a.s.
CZ-69729 Kyjov
Tel. 00420-518 603 111
www.vetropack.com

VMG-0701-01-FOR-006-CZ/EN

POZNAMKA
Designation
LONGNECK FL EW 330 ml
KK

VYROBEK CISLO
Item No
5B054 0330 1002

INDEX
A

Date: 28-Dec-12 Time: 07:21 Message: Vetropack to SAP released drawing: Original is archived at the designoffice