WE RESERVE ALL RIGHTS IN THIS DOCUMENT AND IN THE INFORMATION CONTAINED THERIN. REPRODUCTION, USE OR DISCLOSURE TO THIRD PARTIES WITHOUT EXPRESS AUTHORITY IS STRICTLY FORBIDDEN

© vetropack 2000

FÜER DIESES DOKUMENT UND DEN DARIN DARGESTELLTEN GEGENSTAND BEHALTEN WIR UNS ALLE RECHTE VOR. VERVIELFÄLTIGUNGEN, BEKANNTGABE AN DRITTE ODER VER-WENDUNG SEINES INHALTS SIND OHNE UNSERE AUSDRUECKLICHE ZUSTIMMUNG VERBOTEN

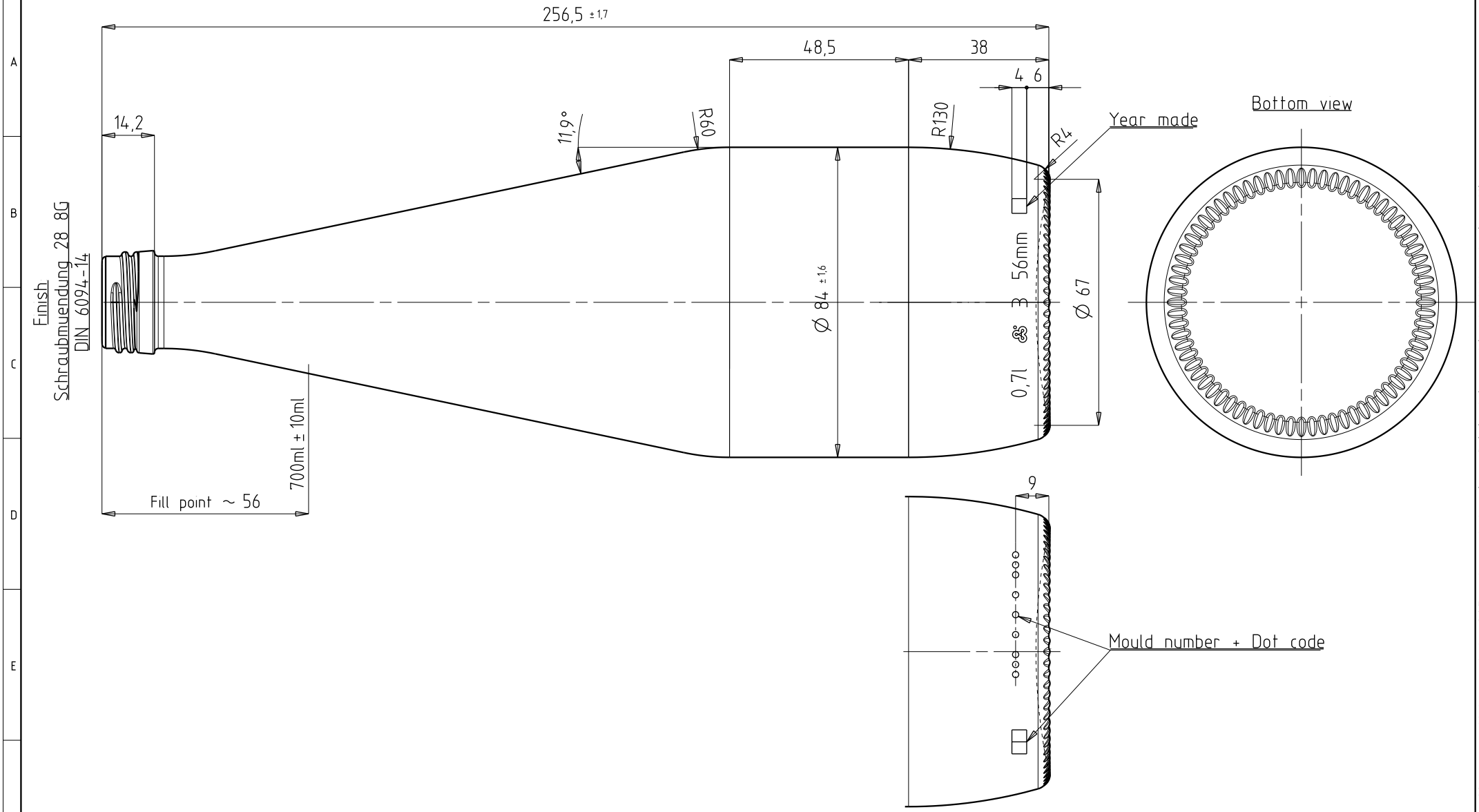

INDEX	ZMENY / modifications	DAT	JMENO
B	Article rename	13 05 14	Pam

Final FtB after successful sampling

SOUHLAS TECHNOLOGA PT approved		DAT	VIS
SOUH VYRTYMU FtB released	VYRZAVOD VMG	DAT 13 05 14	VIS PRE
	VYRZAVOD	DAT	VIS
	VYRZAVOD	DAT	VIS

NETOLEROVANE ROZMERY DLE DIN 6129

dimensions without tolerances conform to standard DIN 6129

TEPLOTA PLNENI Filling temperature	≤ 15 °C	NOMINAL OBJEM Capacity fillpoint	700 ml ± 10 ml
TEPLOTA ZPRACOVANI Conditioning temperature	≤ °C	TOTAL OBJEM Capacity brimful	725 ml ± ml
OBSAH CO_2 CO_2 content	≤ 4 g/l	HMOTNOST Approx glass weight	~ 345 g
OBSAH ALKOHOLU Alcohol content	≤ Vol%	STREDNI TLOUSTKA STENY Average wall thickness	2 47 mm
AXIALNI ZATIZENI Axial pressure	daN	PRUMER POD USTIM Neck connection dia	~ 25,5 mm
POUZITI Disposal	MW AW EW X	VNITRNI PRUMER KALIBRU Min through bore	16 mm
PROCES Process	BB PB EPB X	BARVA Color	GR WE

POZNAMKA Remarks	
ZAKAZNIK Customer	
PODOBNY JAKO Similar to	
NAHRAZUJE Replace No	
NABIDKA CISLO Offer No	E5D0111 0700 3713_B
MERITKO Scale	1 1
KRESLIL Des	Pam
DAT	13 05 14
DATA TYP Filetyp	AZ

vetropack

Vetropack Moravia Glass a s
CZ-69729 Kyjov
Tel 00420-518 603 111
www vetropack com

VMG-0701-01-FOR-006-CZ/EN

POZNAMKA Designation: RADKA 700 ml

VYROBEK CISLO Item No: 5D032 0700 3713

INDEX: B

Date: 19-May-14 Time: 09:03 Message: Vetropack to SAP released drawing: Original is archived at the designoffice